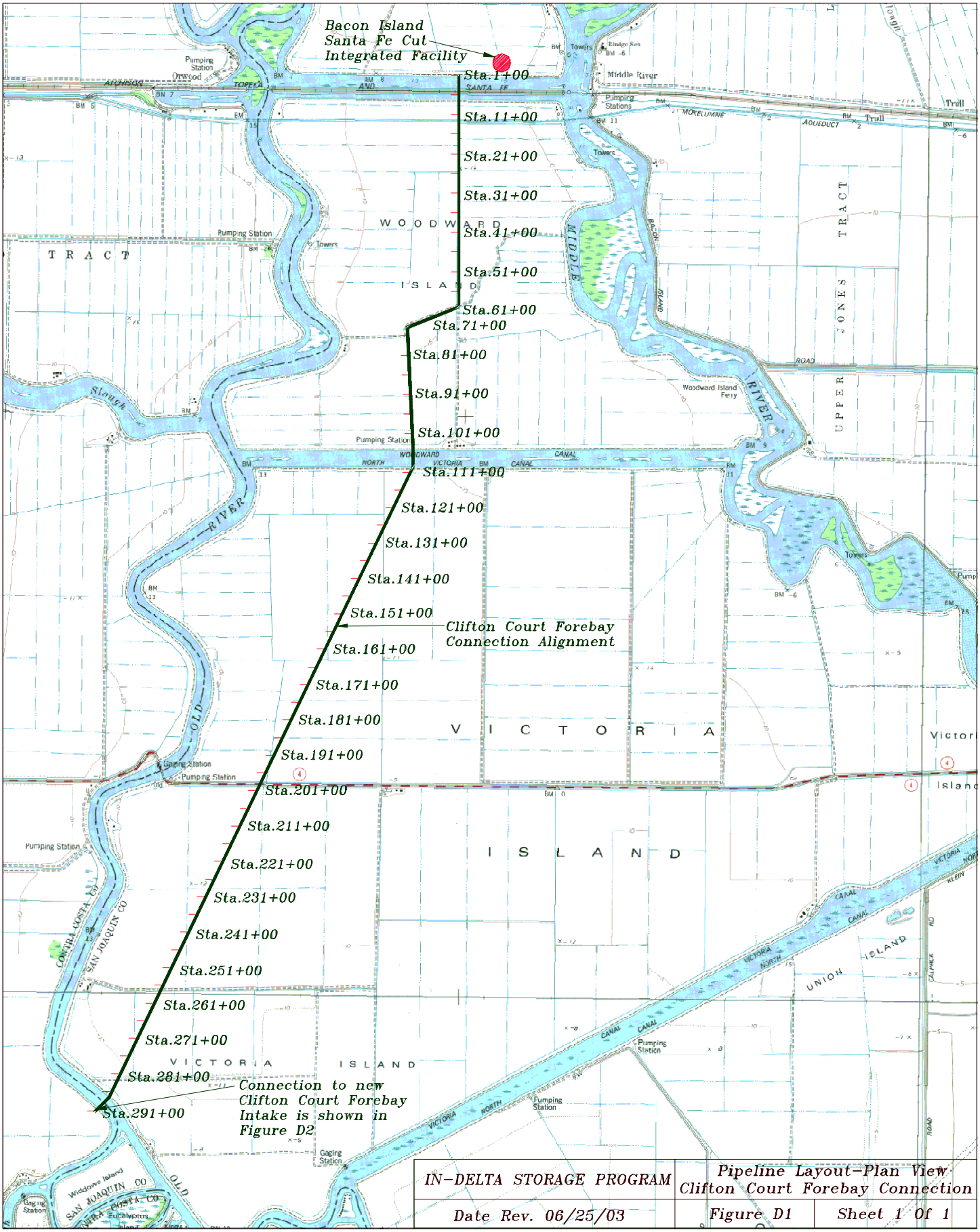

IN-DELTA STORAGE PROGRAM	Pipeline Layout-Plan View Clifton Court Forebay Connection	
Date Rev. 06/25/03	Figure D1	Sheet 1 Of 1

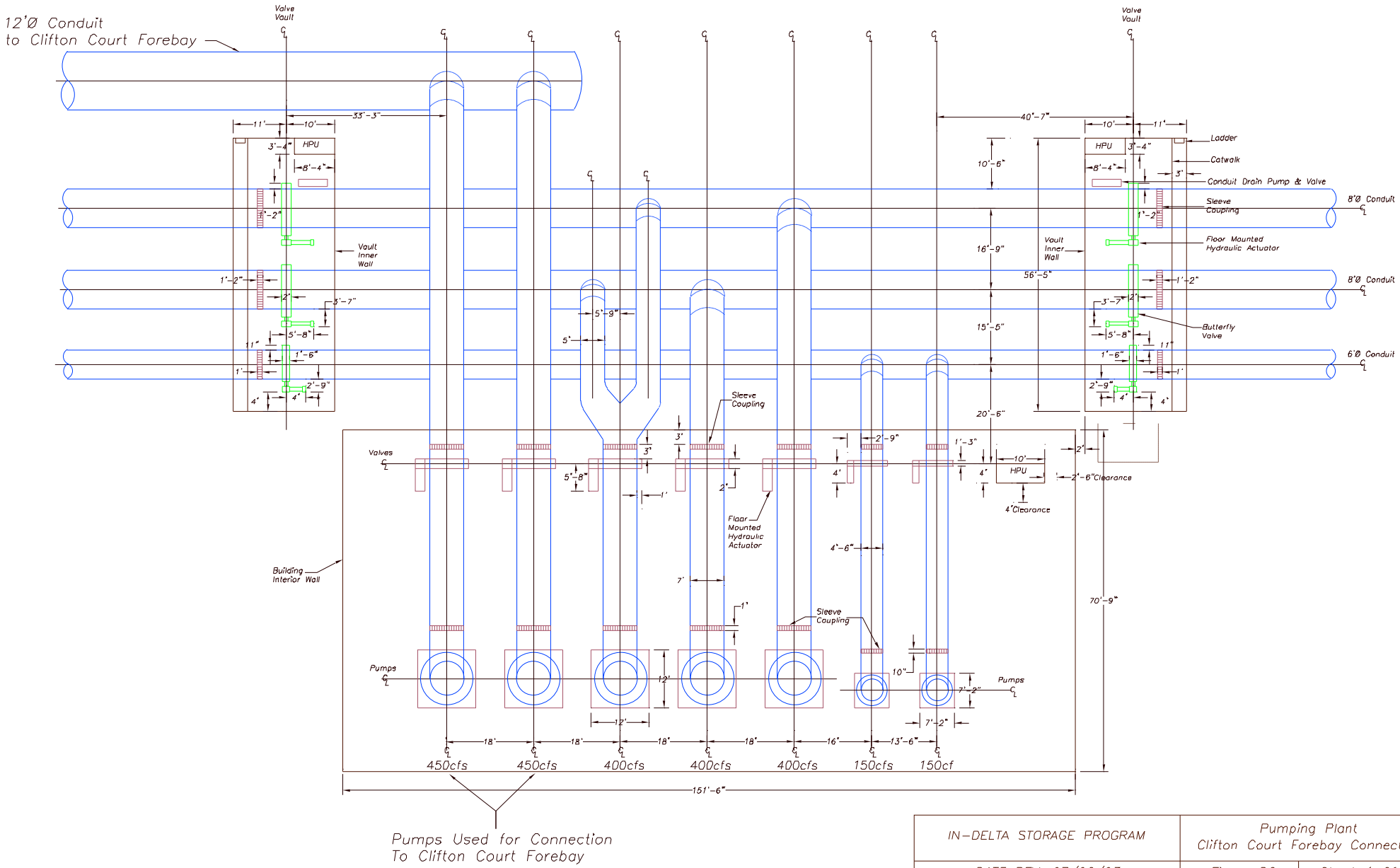

IN-DELTA STORAGE PROGRAM	Pumping Plant Clifton Court Forebay Connection	
DATE REV. 07/02/03	Figure D2	Sheet 1 Of 1