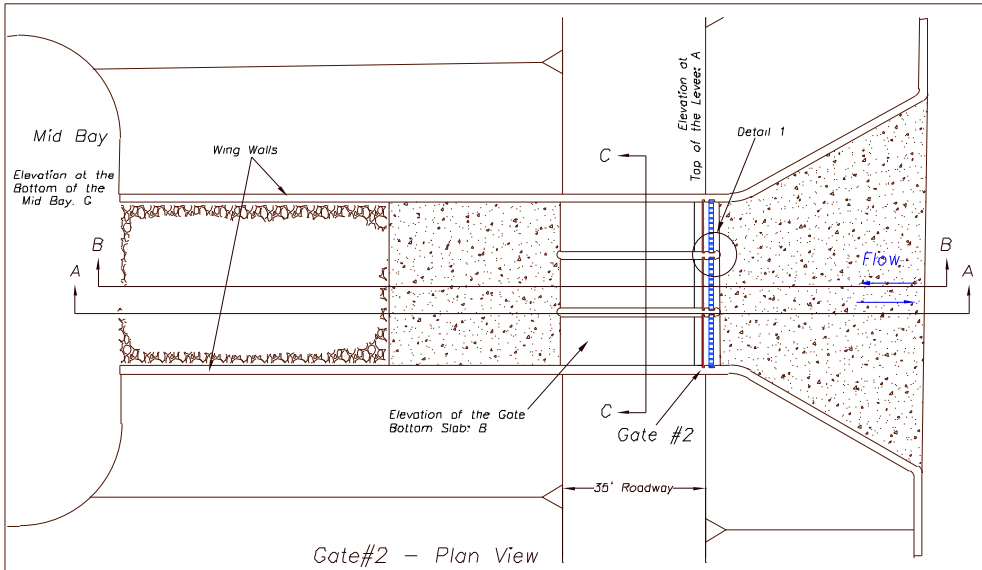

Gate#2 – Plan View

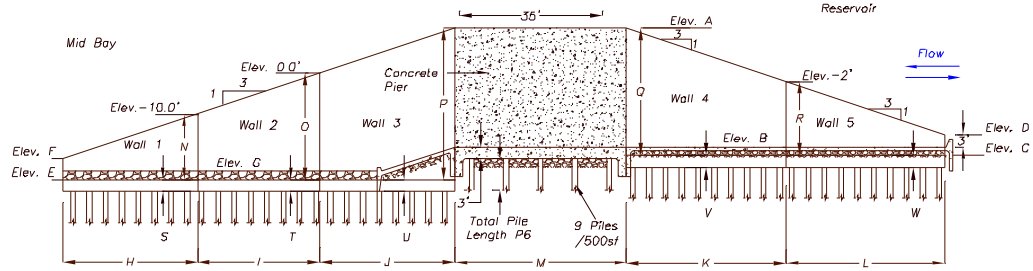

Section–AA
Scale: 1"=30'

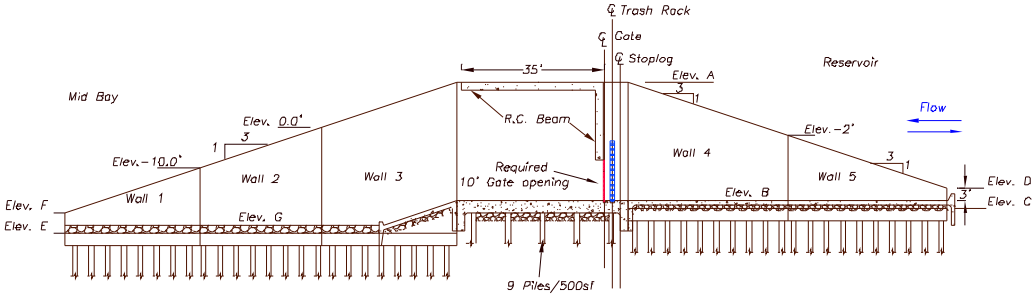

Section–BB
Scale: 1"=30'

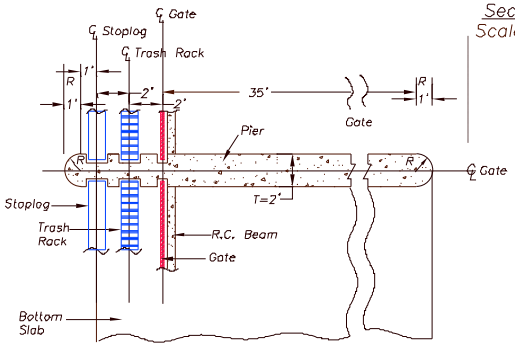

Detail 1 (Typ.)
Scale = 4X

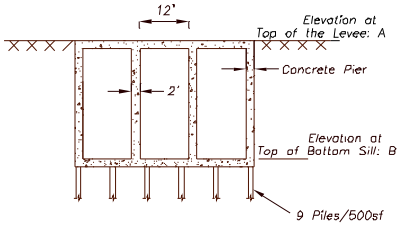

Section–CC
Gate Structure Box Culvert
Scale: 1"=30'

Structure	Dimensions (ft)			
	Webb Tract at San Joaquin River	Webb Tract at False River	Bacon Island at Middle River	Bacon Island at Santa Fe Cut
A	+11	+11	+10.2	+10.4
B	−18	−18	−16	−16
C	−20	−20	−18	−18
D	−15	−15	−13	−13
E	−26	−26	−24	−24
F	−21	−21	−19	−19
G	−24	−24	−22	−22
H	33	33	27	27
I	30	30	30	30
J	33	33	30.6	31.2
K	39	39	36.6	37.2
L	39	39	33	33
M	42	42	42	42
N	16	16	14	14
O	26	26	24	24
P	37	37	34.2	34.4
Q	31	31	28.2	28.4
R	18	18	16	16
S	3	3	2.5	2.5
T	3	3	3	3

Structure	Dimensions (ft)			
	Webb Tract at San Joaquin River	Webb Tract at False River	Bacon Island at Middle River	Bacon Island at Santa Fe Cut
U	3	3	3	3
V	3	3	3	3
W	3	3	3	3
a	2	2	1.7	1.7
b	2	2	2	2
c	3	3	3	3
d	3	3	3	3
e	2	2	2	2
f	30	30	10	10
g	30	30	30	30
h	41	41	41	41
i	41	41	41	41
j	30	30	30	30
P1	36	21	43.5	38.5
P2	36	21	43	38
P3	36	21	43	38
P4	42	27	49	44
P5	42	27	49	44
P6	44	29	51	46

IN–DELTA STORAGE PROGRAM		INTEGRATED FACILITY	
		Gate #2 Details	
SCALE: 1"=30'	DATE REV. 04/22/03	FIGURE C9	SHEET 1 Of 2

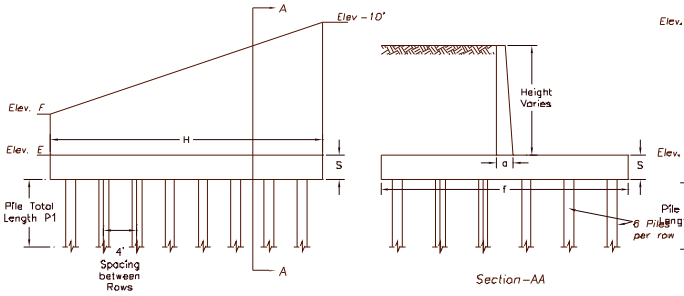

Retaining Wall 1 Layout

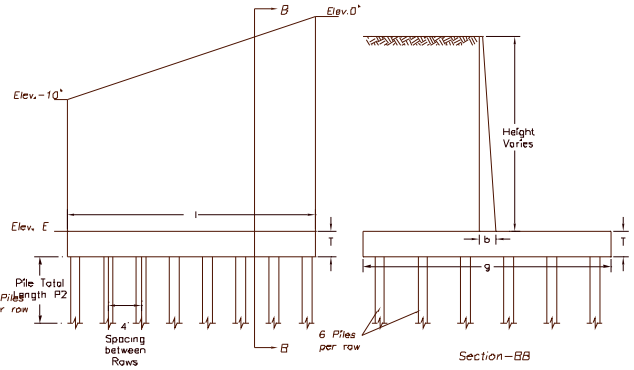

Retaining Wall 2 Layout

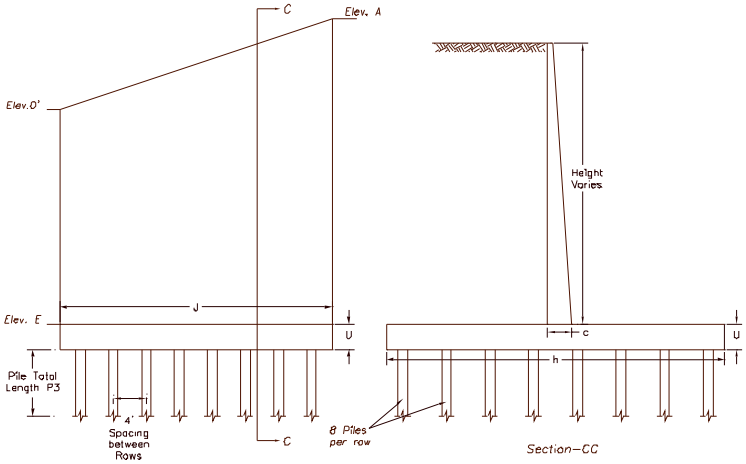

Retaining Wall 3 Layout

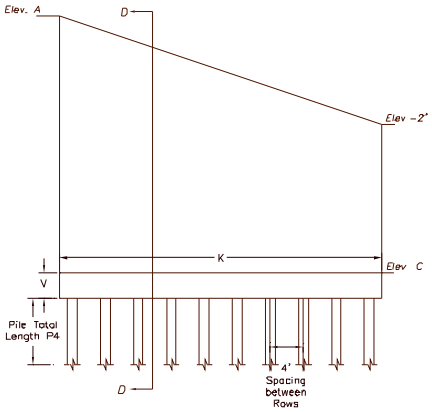

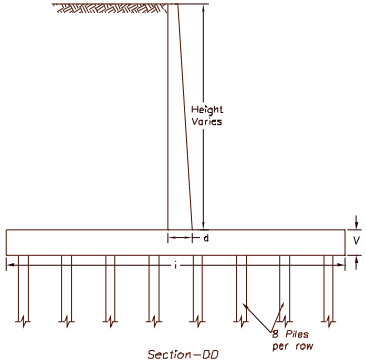

Retaining Wall 4 Layout

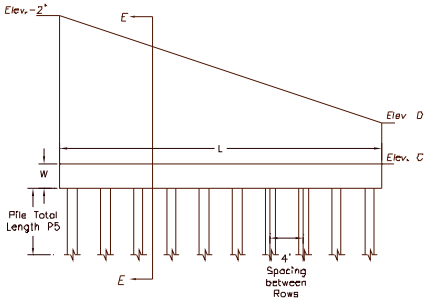

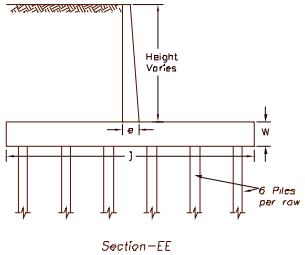

Retaining Wall 5 Layout

IN-DELTA STORAGE PROGRAM		INTEGRATED FACILITY	
		Gate #2 Retaining Walls Details	
SCALE: 1"=15'	DATE REV. 04/22/03	FIGURE C10	SHEET 2 Of 2

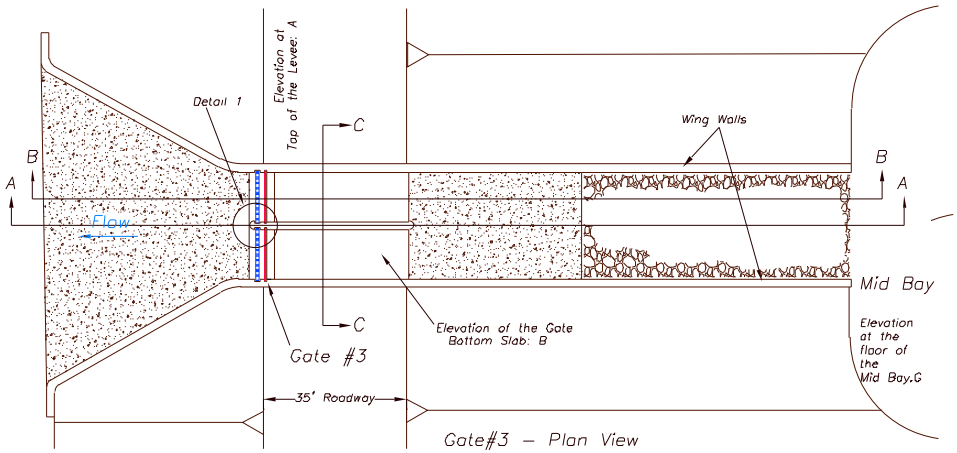

Gate#3 – Plan View

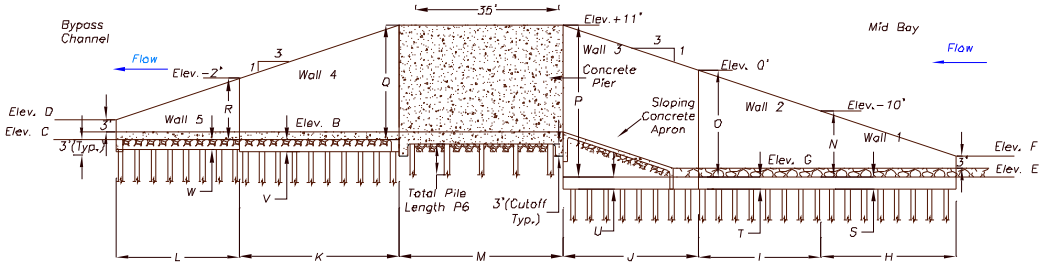

Section–AA
Scale: 1"=30'

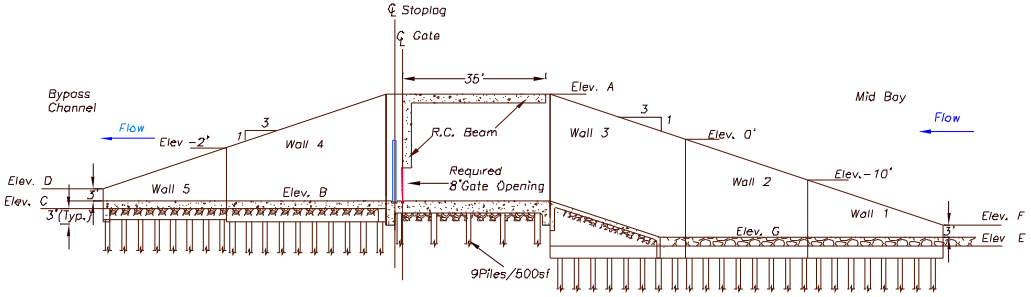

Section–BB
Scale: 1"=30'

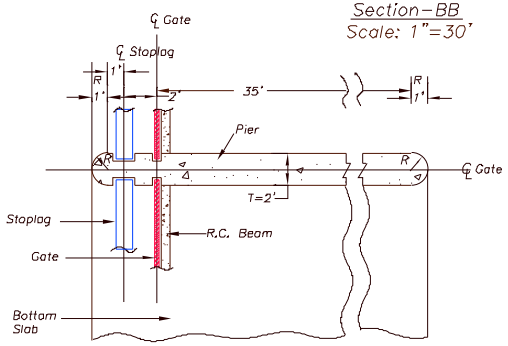

Detail 1 (Typ.)
Scale = 4X

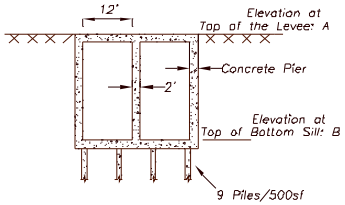

Section–CC
Gate Structure Box Culvert
Scale: 1"=30'

Structure	Dimensions (ft)			
	Webb Tract at San Joaquin River	Webb Tract at False River	Bacon Island at Middle River	Bacon Island at Santa Fe Cut
A	+11	+11	+10.2	+10.4
B	−15	−16	−12	−8
C	−17	−18	−14	−10
D	−12	−13	−9	−5
E	−26	−26	−24	−24
F	−21	−21	−19	−19
G	−24	−24	−22	−22
H	33	33	27	27
I	30	30	30	30
J	33	33	30.6	31.2
K	39	39	36.6	37.2
L	30	33	21	9
M	40	40	40	40
N	16	16	14	14
O	26	26	24	24
P	37	37	34.2	34.4
Q	28	29	24.2	20.4
R	15	16	12	8
S	3	3	2.5	2.5
T	3	3	3	3

Structure	Dimensions (ft)			
	Webb Tract at San Joaquin River	Webb Tract at False River	Bacon Island at Middle River	Bacon Island at Santa Fe Cut
U	3	3	3	3
V	3	3	3	3
W	2.5	3	2.5	2.5
a	2	2	1.7	1.7
b	2	2	2	2
c	3	3	3	3
d	3	3	2	2
e	1.7	2	1.7	1.7
f	30	30	10	10
g	30	30	30	30
h	41	41	41	41
i	41	41	30	30
j	10	30	10	10
P1	36	21	43.5	38.5
P2	36	21	43	38
P3	36	21	43	38
P4	45	29	53	52
P5	45.5	29	53.5	52.5
P6	47	31	55	54

IN–DELTA STORAGE PROGRAM		INTEGRATED FACILITY	
		Gate #3 Details	
SCALE: 1"=30'	DATE REV. 04/22/03	FIGURE C11	SHEET 1 Of 2

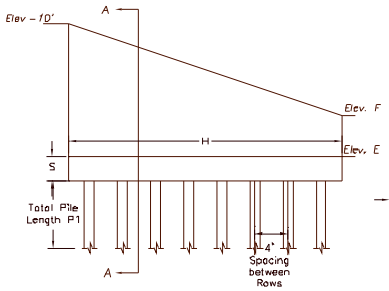

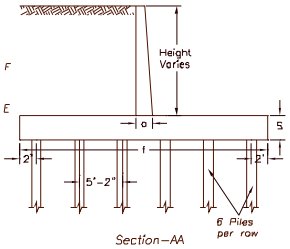

Retaining Wall 1 Layout

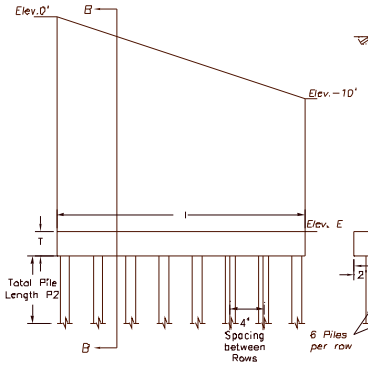

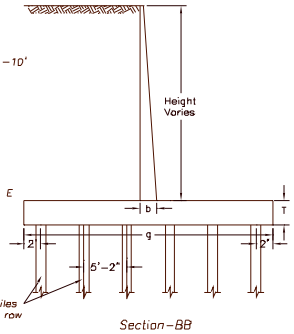

Retaining Wall 2 Layout

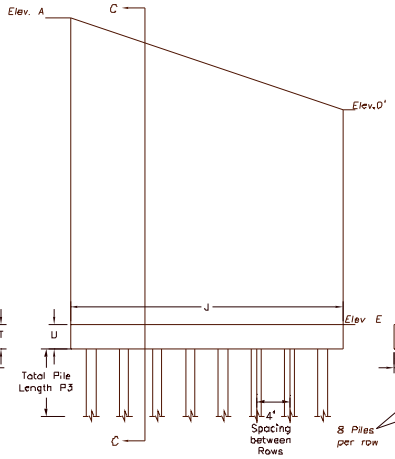

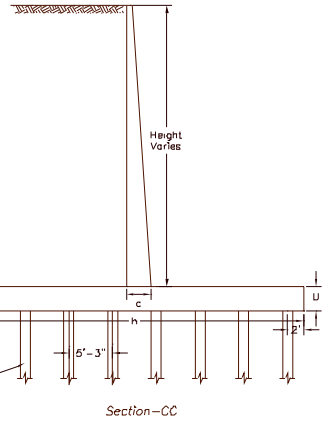

Retaining Wall 3 Layout

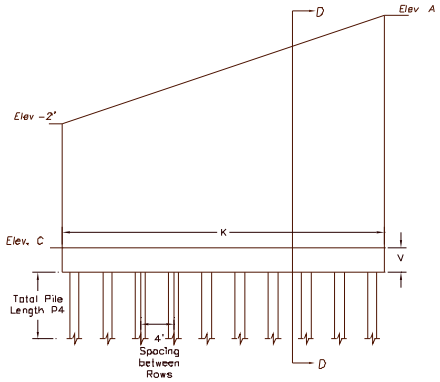

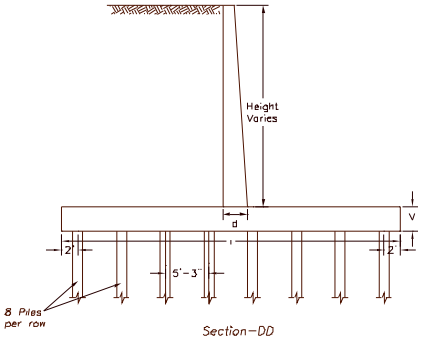

Retaining Wall 4 Layout

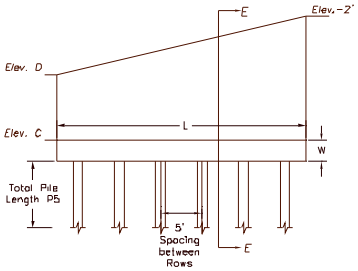

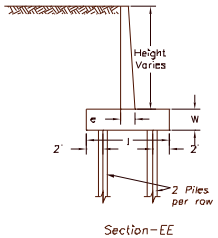

Retaining Wall 5 Layout

IN-DELTA STORAGE PROGRAM		INTEGRATED FACILITY	
		Gate #3 Retaining Walls Details	
SCALE:1"=15'	DATE REV. 04/22/03	FIGURE C12	SHEET 2 Of 2

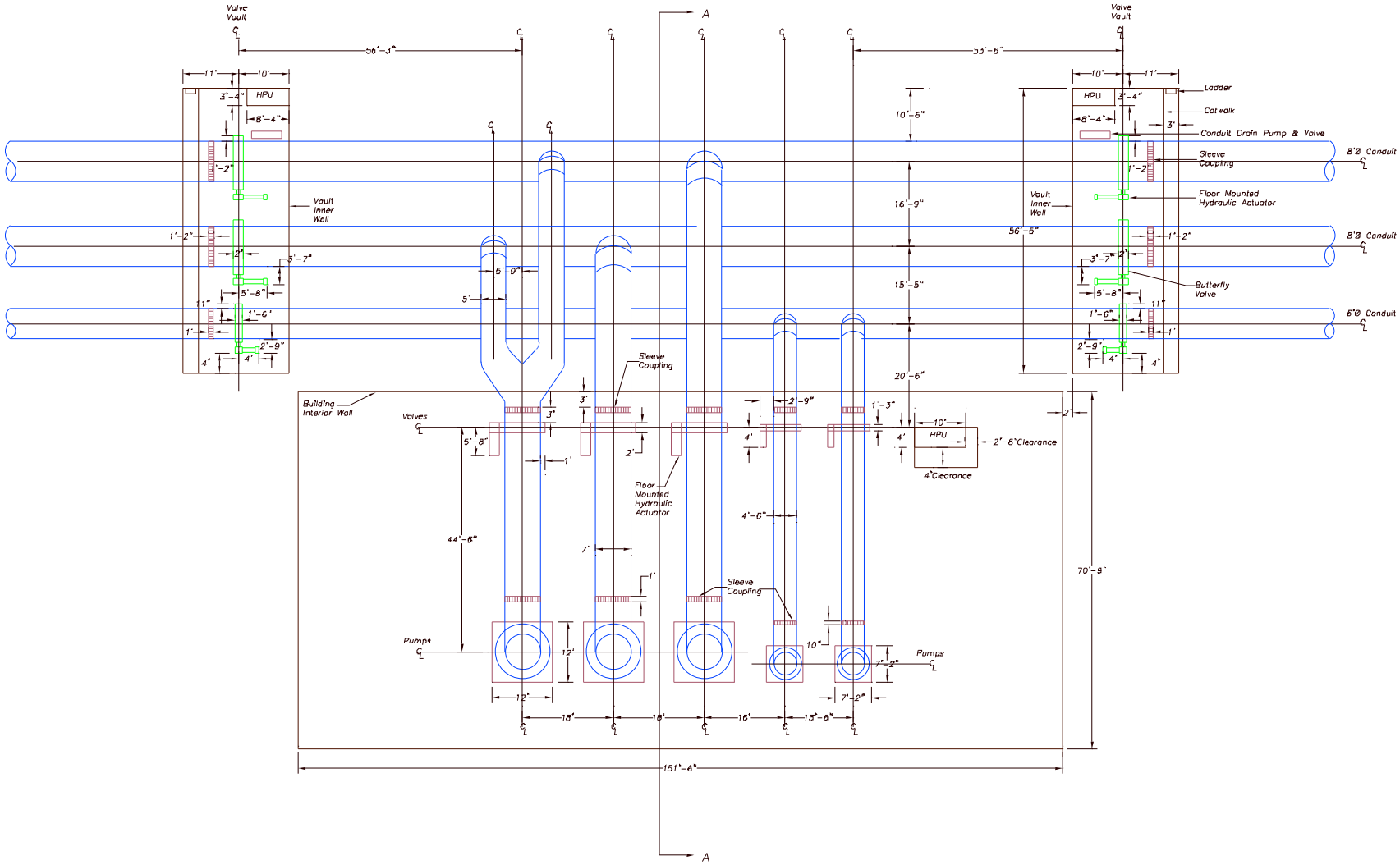

Piping Layout

IN-DELTA STORAGE PROGRAM		PUMPING PLANT	
		Piping Layout	
SCALE: 1"=20'	DATE REV. 04/16/03	FIGURE C13	SHEET 1 Of 1

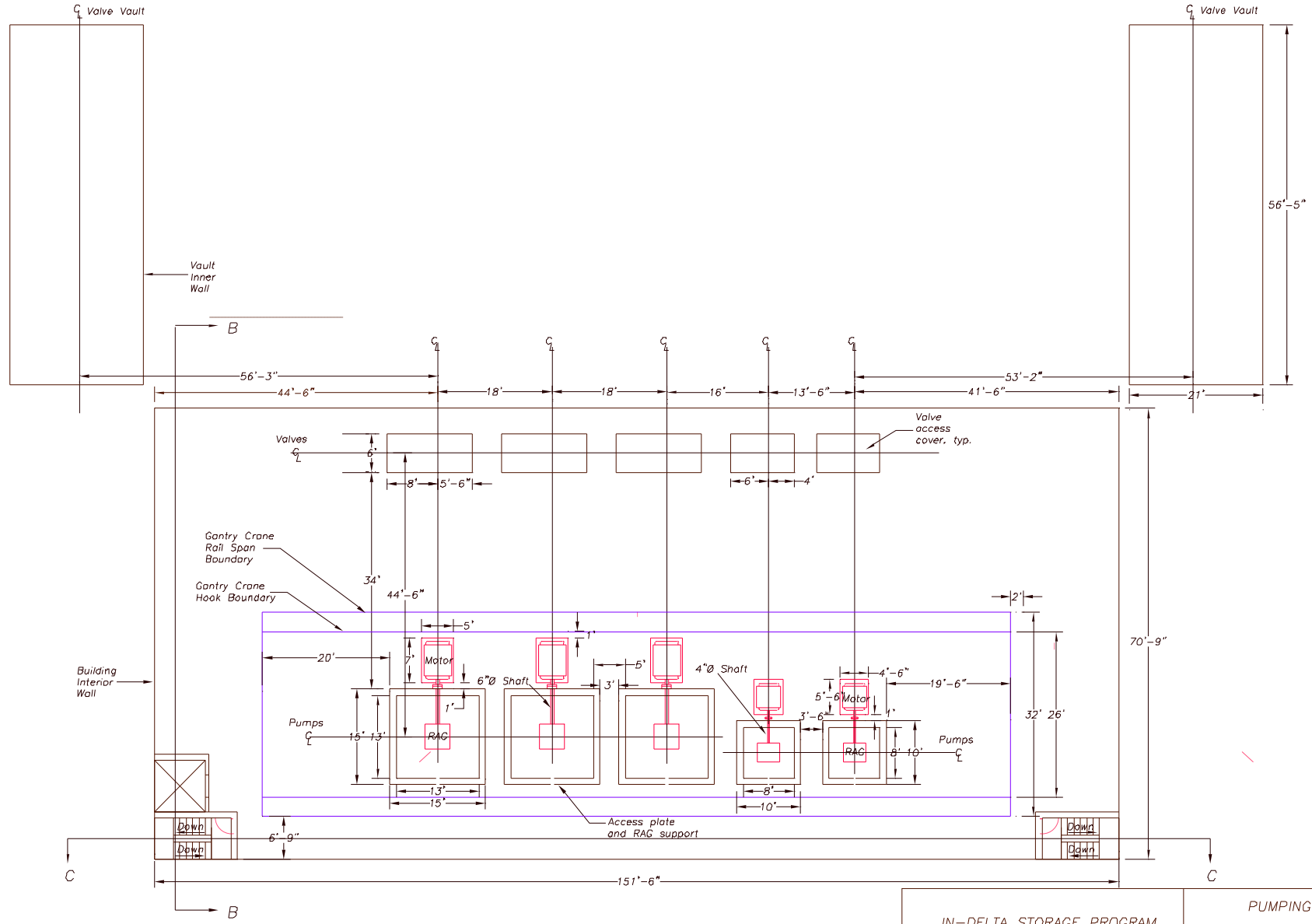

Upper Level Layout

IN-DELTA STORAGE PROGRAM		PUMPING PLANT	
		Upper Level Layout	
SCALE: 1"=15'	DATE REV. 04/16/03	FIGURE C14	SHEET 1 Of 1

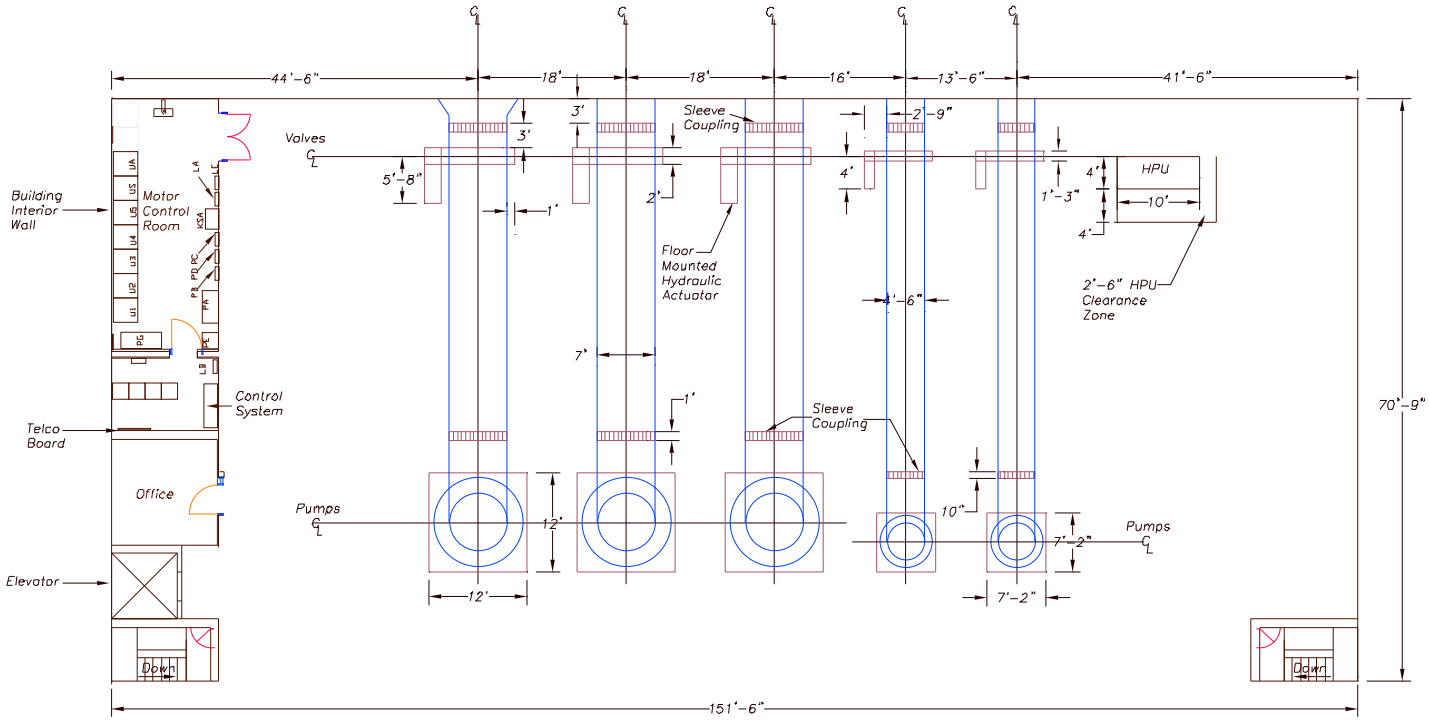

Middle Level Layout

IN-DELTA STORAGE PROGRAM		PUMPING PLANT	
		Middle Level Layout	
SCALE:1"=15'	DATE REV. 04/16/03	FIGURE C15	SHEET 1 Of 1

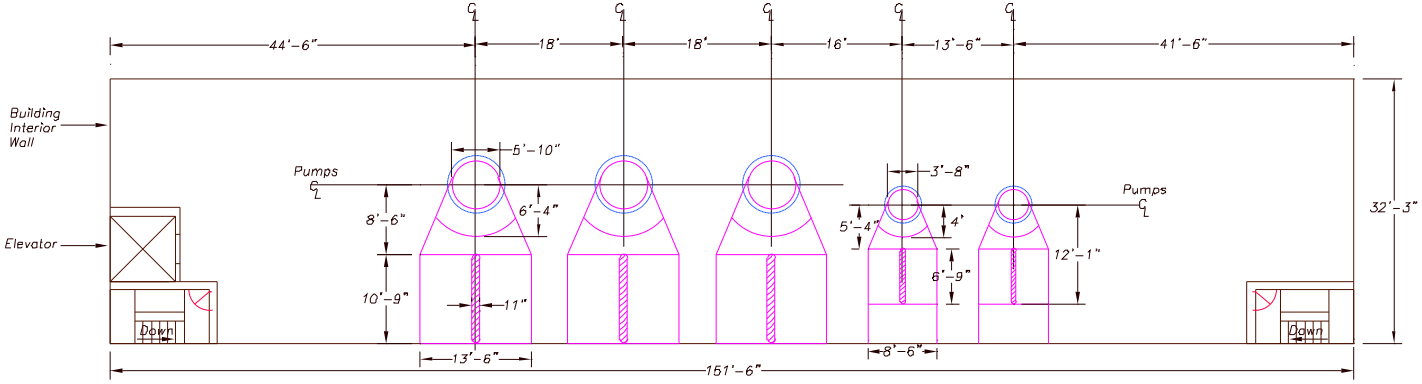

Lower Level Layout

IN-DELTA STORAGE PROGRAM		PUMPING PLANT	
		Lower Level Layout	
SCALE: 1"=15'	DATE REV. 04/17/03	FIGURE C16	SHEET 1 Of 1

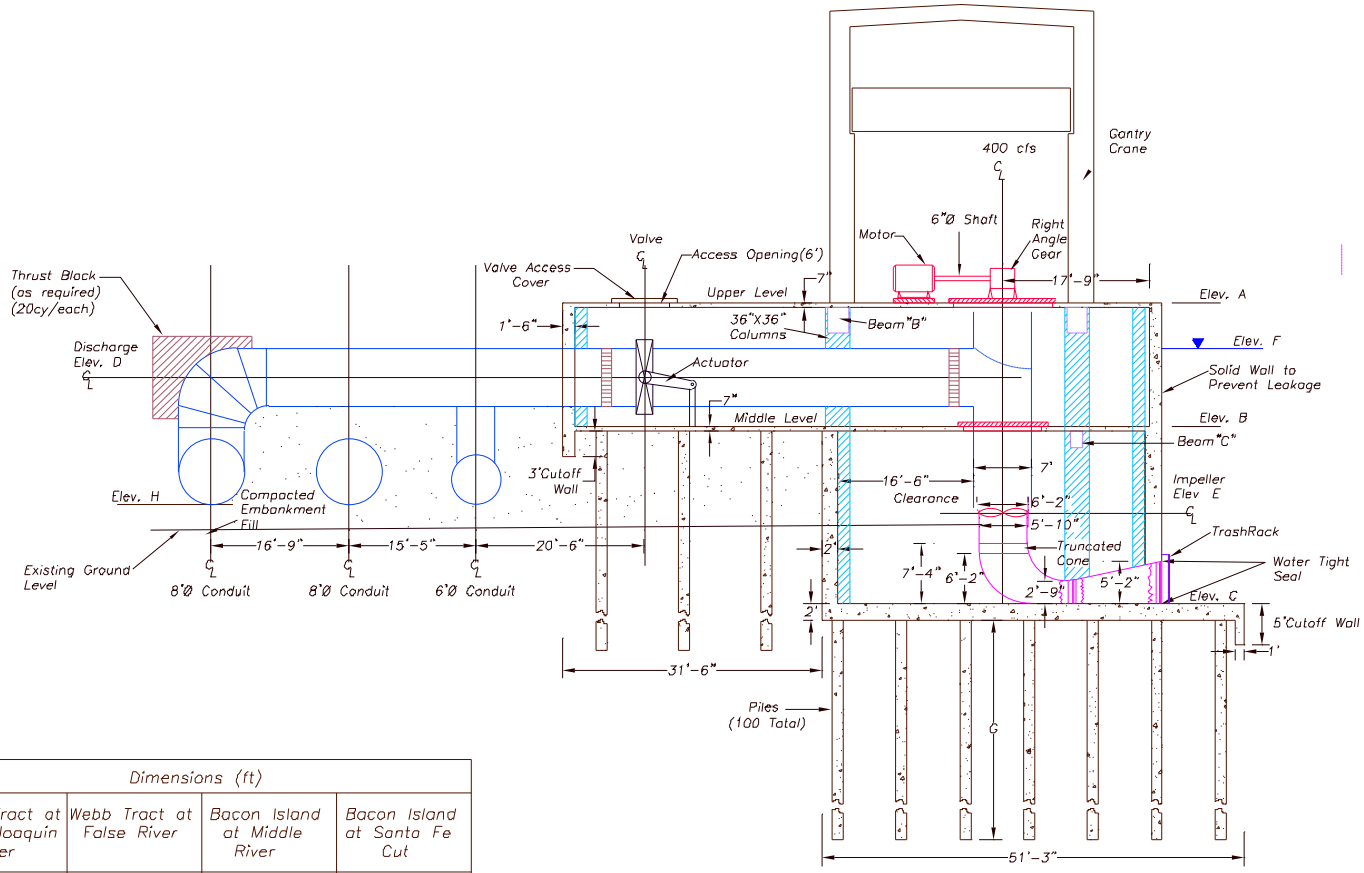

Section AA

Structure	Dimensions (ft)			
	Webb Tract at San Joaquin River	Webb Tract at False River	Bacon Island at Middle River	Bacon Island at Santa Fe Cut
A	+12.5	+12.5	+14.5	+14.5
B	-2.5	-2.5	-0.5	-0.5
C	-24	-24	-22	-22
D	+3.5	+3.5	+5.5	+5.5
E	-13	-13	-10	-10
F	+6.8	+6.4	+6.8	+6.8
G	39	24	46	41
H	-12	-12	-10	-10

IN-DELTA STORAGE PROGRAM		PUMPING PLANT	
		Section AA (From Piping Layout)	
SCALE:1"=15'	DATE REV. 04/17/03	FIGURE C17	SHEET 1 Of 1

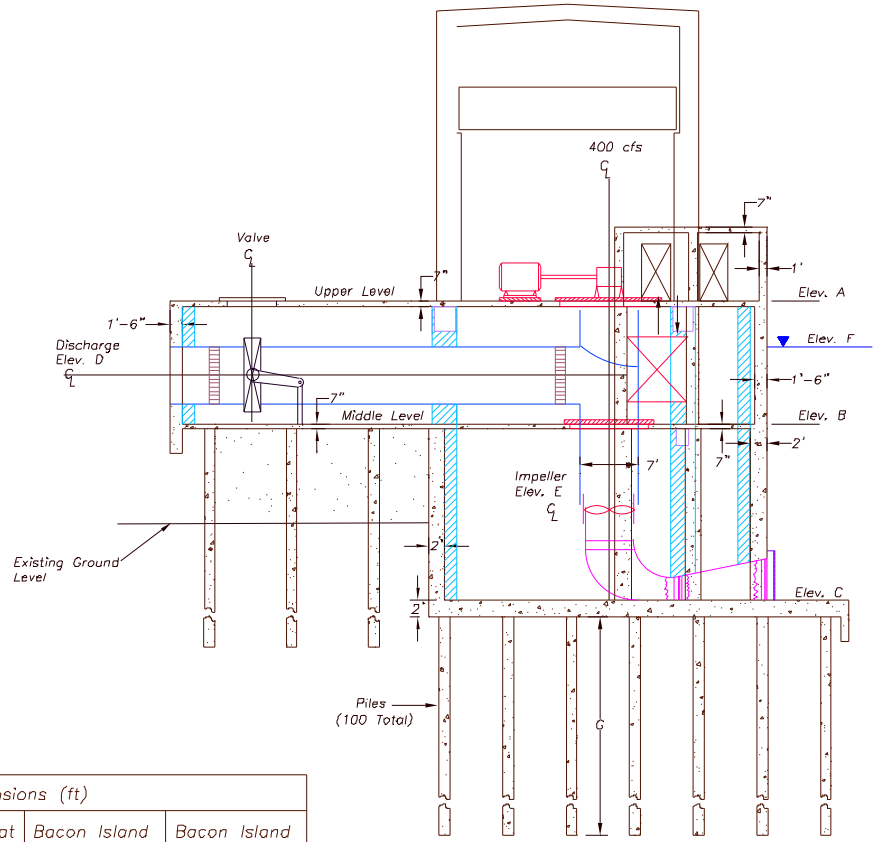

Section BB

Structure	Dimensions (ft)			
	Webb Tract at San Joaquin River	Webb Tract at False River	Bacon Island at Middle River	Bacon Island at Santa Fe Cut
A	+12.5	+12.5	+14.5	+14.5
B	−2.5	−2.5	−0.5	−0.5
C	−24	−24	−22	−22
D	+3.5	+3.5	+5.5	+5.5
E	−13	−13	−10	−10
F	+6.8	+6.4	+6.8	+6.8
G	39	24	46	41

IN-DELTA STORAGE PROGRAM		PUMPING PLANT	
		Section BB (From Upper Level Layout)	
SCALE:1"=15'	DATE REV. 04/17/03	FIGURE C18	SHEET 1 Of 1

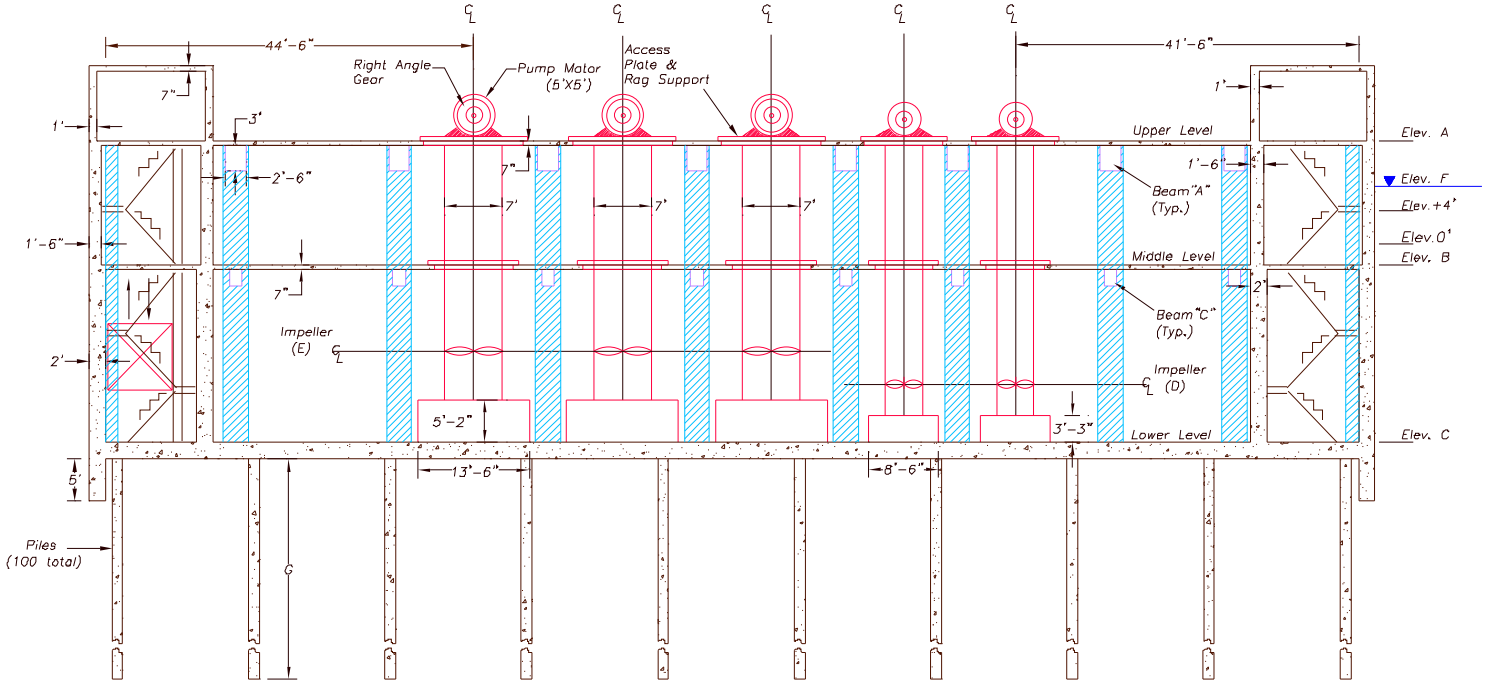

Section CC

Structure	Dimensions (ft)			
	Webb Tract at San Joaquin River	Webb Tract at False River	Bacon Island at Middle River	Bacon Island at Santa Fe Cut
A	+12.5	+12.5	+14.5	+14.5
B	−2.5	−2.5	−0.5	−0.5
C	−24	−24	−22	−22
D	−17	−17	−15	−15
E	−13	−13	−10	−10
F	+6.8	+6.4	+6.8	+6.8
G	39	24	46	41

IN-DELTA STORAGE PROGRAM		PUMPING PLANT	
		Section CC (From Upper Level Layout)	
SCALE: 1"=15'	DATE REV. 03/13/03	FIGURE C19	SHEET 1 Of 1