UNIVERSITY OF CALIFORNIA
COLLEGE OF AGRICULTURE
AGRICULTURAL EXPERIMENT STATION

PROJECT NO. 1686

REPORTED BY H.B.Schultz

Davis - Ag. Engineering
Campus and Division or Department

DATE December 31, 1961

Annual Summary Statement of Progress for year ending Dec. 31, 1961
This Summary is in addition to, not in place of, more complete reports of progress prepared periodically and at least once a year with a deadline of Feb. 1.

Title: PEAT LAND CONSERVATION AND PEAT DUST ABATEMENT

Personnel: H. B. Schultz and A. B. Carlton

Principal results of year:

All wind profile measurements of the past 3 years were re-evaluated by means of calculations. Previously, only graphical methods were applied. The new results for effectiveness of inter-row planting obtained by three different methods were compared and found rather similar which corroborates the surprising results that inter-row planting provides wind protection for all wind directions, only with a somewhat smaller efficiency for parallel wind. The methods of calculation and the results were presented as a paper to the combined meeting of the three Societies, ASA, SSSA, AMS at St. Louis.

A surprisingly high number of SW winds at the southern border of the area under investigation was observed again. The diurnal HEAT-LOW over Northern California appears to be the cause.

The month of May experienced a record number of days with erosion conditions.

Publications:

(If more space is needed, use back of this sheet.)

Form C-10m-1.'57(C4505)

D-029791

D-029791

Form B-50m-10,'61 (C3520)

UNIVERSITY OF CALIFORNIA
DIVISION OF AGRICULTURAL SCIENCES
AGRICULTURAL EXPERIMENT STATION

PROJECT NO. 1686 PG. 2/2

REPORTED BY H. S. Schultz
Project Leader

Davis - Ag. Engineering
Campus and Department

DATE December 31, 1961

TITLE: PEATLAND CONSERVATION AND PEAT DUST ABATEMENT

Determination of effectiveness of inter-row plantings in ridged asparagus fields.

The data of three years' field measurements were summarized for comparison of the three methods of attack. This was considered necessary for obtaining confidence in the results. No precedence was available of measurements under the field conditions we have dealt with and secondly, the approaches used for a solution were new also. Only last winter similar procedures were utilized and continued this winter by the University of Wisconsin experts (Suomi, Lettau, Tanner) on a frozen lake near Madison. It was realized there after many frustrating attempts that comparison of various wind profiles was too difficult for a number of reasons, e.g. no similarity in instrumentation, different environmental conditions, especially time of day causing variable temperature stratification. Therefore, the Wisconsin group turned to the so-called "controlled experiment" in order to eliminate the overlapping factors. With the same anemometer mast, wind profiles are alternately measured there over the bare ice surface and over a varying number of bushel baskets thrown on the ice surface and removed just as quickly.

The advantage of a "controlled experiment" was achieved in this project by a portable mast (see report 1958) which could be readily moved to several test sites during one operation so that various profiles could be measured over bare and interplanted fields and under various angles of the wind to the ridges during one dust storm.

However, no increased protection for the wind angles between 0 and 90° could be detected by this method. In comparison with the data given in the first column, the n-values for the asparagus fields appear to be somewhat too high. The reason seems to be that the measurements were only made in the daytime, and in midsummer, which tends to increase the n-values.

There is much less scatter in the data of Figure 3 than in those of Figure 1, so that the "power law" appears to be more suitable for the present type of work than the "logarithmic law" given in Figure 1.

A recalculation of data obtained in the seasons 1959 and 1960 for wind velocities at one inch above the ridges furnished the Figure 4, primarily used as a third approach for determining the effectiveness of the interplantings. This method was used reluctantly, because accurate measurement is hard to achieve, as can be seen by the scattering of points in the diagram. Nevertheless, it proved to be of value because it corroborates the results of the two previous approaches. The diagram shows that the velocity is reduced in the interplanted fields to 50 to 60% of that in the bare fields for all wind directions, and to about 70% in wind parallel to the ridges, when the interplantings are developed normally. In low stands of barley (due to late planting, or chopping heads off) a reasonably good protection was also found, as can be seen by the upper curve. The dip in the lower curve at 45° wind angle would agree with Figure 1, but it is weak, if real after all.

In Figure 1, one of the newest formulas for wind decrease toward the ground is given, in which "d" represents the location of the equivalent surface, namely the height at which the velocity of a measured profile would reach the zero value. The d-heights were previously determined for the 1959 profiles and only by a graphical method. This year, the profiles of all three years were evaluated according to the formula given in Figure 1. The height, d, was calculated for each profile in the following fashion: a function, A, of u (velocity) at various heights (z) was defined, in such a way, that it depended only on d, all the other unknowns being cancelled. Thus

$$A = \frac{u_{400}-u_{200}}{u_{300}-u_{100}} = \frac{\log(400-d) - \log(200-d)}{\log(300-d) - \log(100-d)}$$

where $u_{400}$ is the measured velocity at 400 cm height, etc. Various values of d were then postulated and the function A computed for each (Figure 2) and compared to the experimentally determined values.

The negative values of "d" in Figure 1 for bare ridges must be interpreted that the wind profile only reaches the zero value below the ridge tops, and that the zero-surface is somewhat lower for parallel wind than for other directions. The positive values for interplanted fields show that the interplantings have lifted the "equivalent zero-height" above the ridge tops, thus taking the wind load off from the ridges. This protecting effect exists for all wind angles, including parallel wind. In the 1959-data significantly higher d-values were found for wind angles between 0 and 90°. In the 3-year summary in Table 1, however, this increase is only slightly indicated. More

worrisome seems to be the rather large spread in the d-values for which three factors may be responsible. The first one could be the variance in test sites with differently developed stands of grain strips. A second factor could be the fact that a few profiles were included in the listing that were obtained in velocities of 10 to 15 mph instead of the usual 15 to 20 mph velocities. Under the lower velocities the temperature lapse rate may be somewhat increased affecting the wind profile toward higher d-values unless an adjustment is made. This adjustment could be omitted in our "controlled experiment" because the error is contained to about the same amount in the profiles over the bare and interplanted fields. The third reason of the spread is believed to lie in the formula (presented in Table 1) with its inherent sensitivity to inaccuracies of measurement, curve plotting, etc. so that little errors can have big effects. It was, therefore, considered essential to check these results with those of the alternate methods.

In Figure 3, the old, venerable, now somewhat neglected, power law for wind increase with height is given and the listing of the values for n, which were computed for all profiles of the 3-year period of field measurements. The exponent, n, is among other influences dependent on the roughness of the surface. In the first column are given the results obtained in the "Thirties" by Norwegian, British, German, and Austrian investigators. The n-values obtained for asparagus ridges, bare and interplanted, compare very well with the results presented in Figure 1. For all wind angles to the ridges, the interplantings provide a very efficient protection.

Fig 1

EQUIVALENT SURFACE HEIGHTS, d, IN cm,

OVER ASPARAGUS RIDGES, FROM $u = \frac{u_*}{k} \log \frac{z-d}{z_0}$

| RIDGES | BARE | INTERPLANTED WITH BARLEY | |
|---|---|---|---|
| | | FULLY GROWN | LOW STAND |
| PERPENDICULAR WIND | −5 to −8 | +24 to 42 | – |
| WIND ANGLE BETWEEN 0 AND 90° | −6 to −10 | +26 to 47 | +14 to 18 |
| PARALLEL WIND | −11 to −13 | +21 to 31 | +19 |



D-029796

No. 911-18, July 2 ...
Each 100 ... heavy, ...
The A. Lietz Co. San Francisco
Made in U.S.A.

Figure 2.

HES 10/18/61

$$A = \frac{\log z_4 - \log z_2}{\log z_3 - \log z_1}$$

$$A = \frac{\log z_4 - \log z_2}{\log z_3 - \log z_1}$$

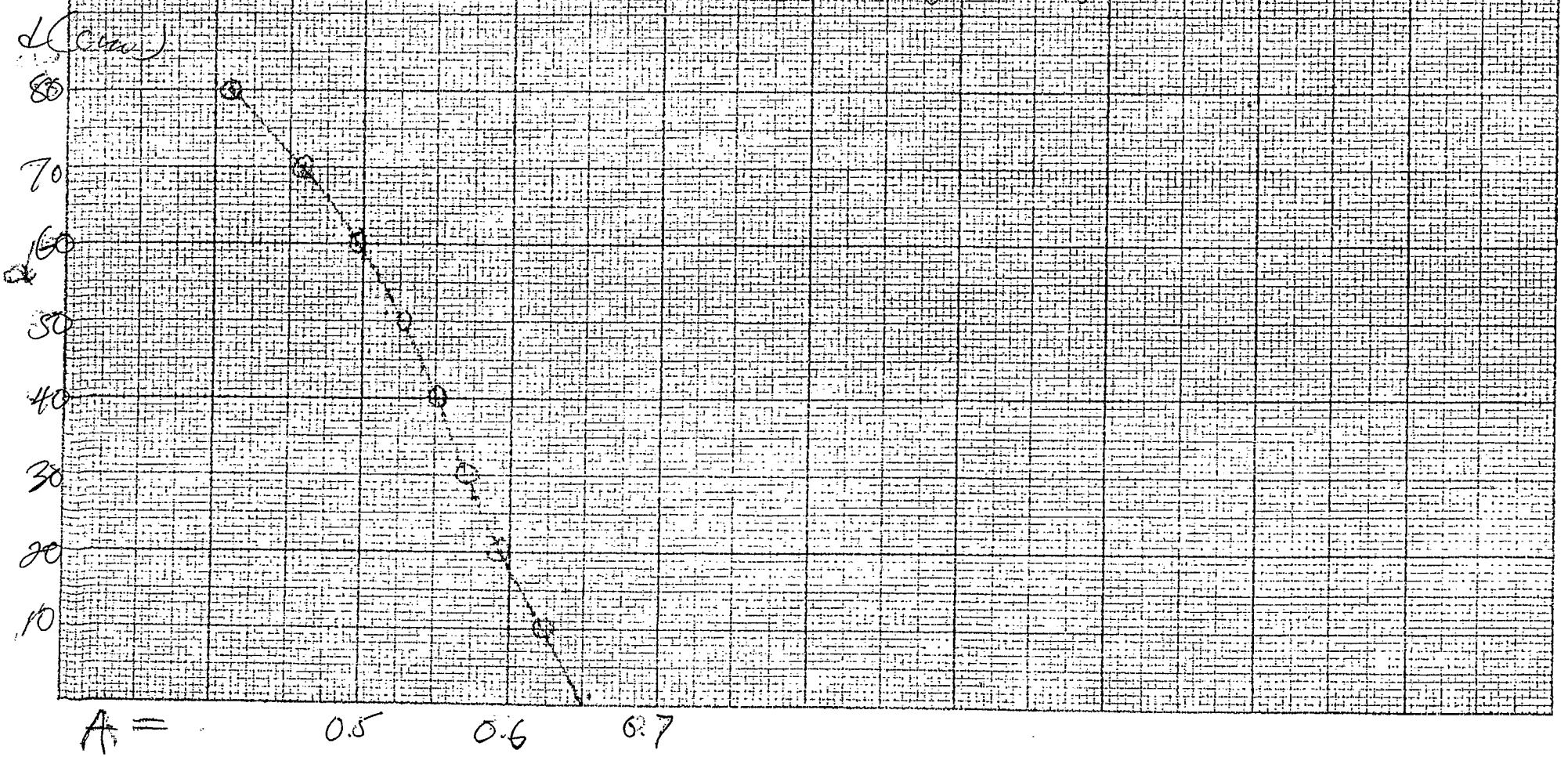


D-029797

D—029797

Fig 3

TABULATION OF n – VALUES IN POWER LAW, $u = u_1 \left(\frac{z}{z_1}\right)^{1/n}$
OVER DIFFERENT SURFACES

| n | PREVIOUS INVESTIGATIONS | ASPARAGUS RIDGES | |
|---|---|---|---|
| | | BARE | INTERPLANTED |
| 7 | [redacted] POLISHED PLATE | | |
| 5 to 6 | Sachs [redacted] | [redacted] | |
| 4 to 5 | AIRPORT, STUBBLES, FALLOW FIELD | WIND ANGLE NEAR 45° (3.2 to 4.6) | |
| 3 to 4 | WHEAT FIELD TALL GRASS | WIND AT RIGHT ANGLES (3.3 to 3.6) | WIND PARALLEL (3.1 to 3.7) |
| 2 to 3 | BEET FIELD | | WIND ANGLE 70 TO 90° (2.6 to 3.0) |



D-029798

Figure 4

Wind velocity over interplanted asparagus ridges in % of velocity over non-interplanted ridges Anemometer cups 1" above ridges

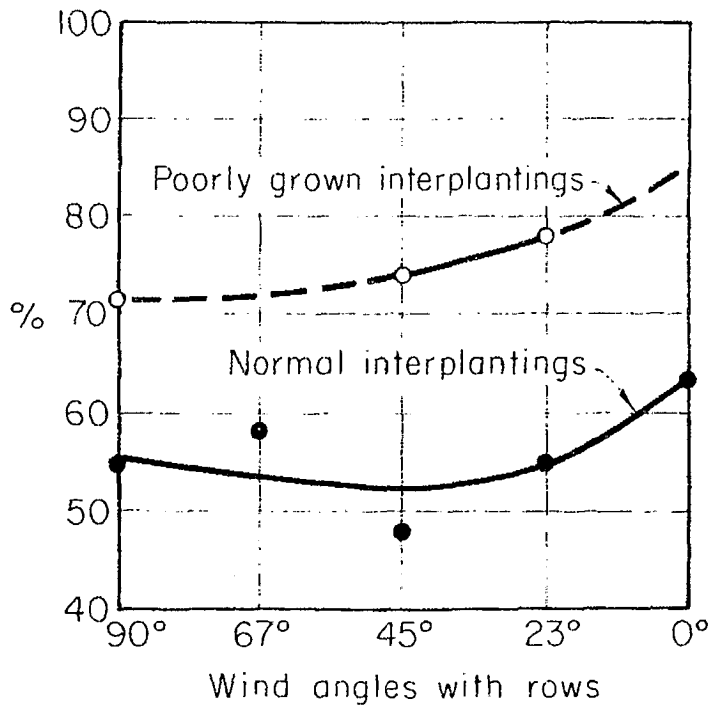


D-029799

D-029799

p. 217

Upper Jones Tract, Wind Roses Summer 1961

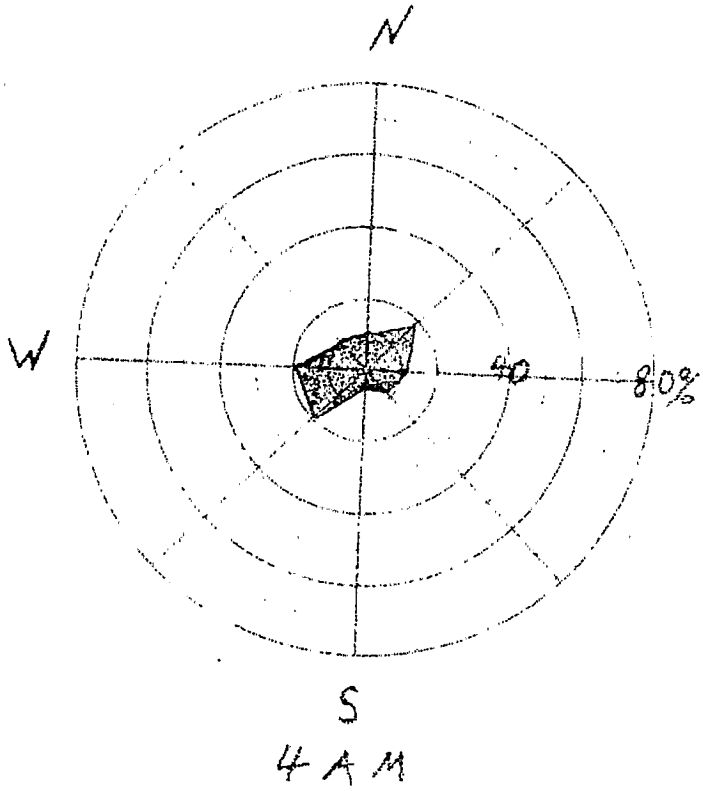


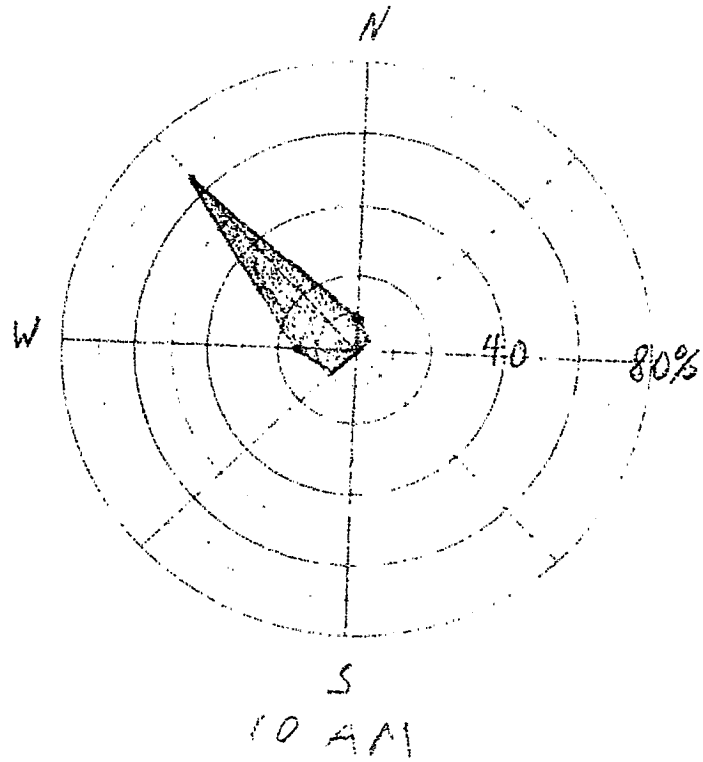


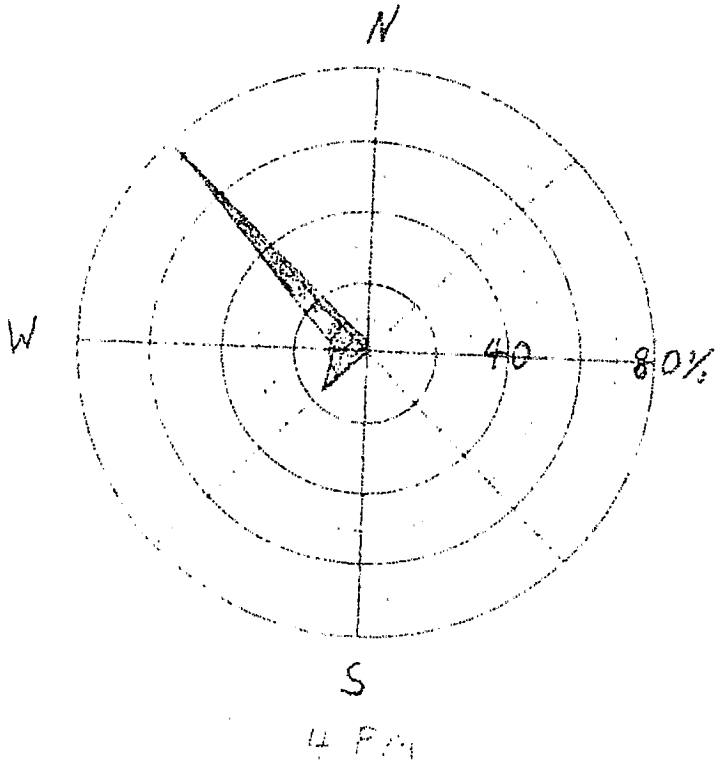


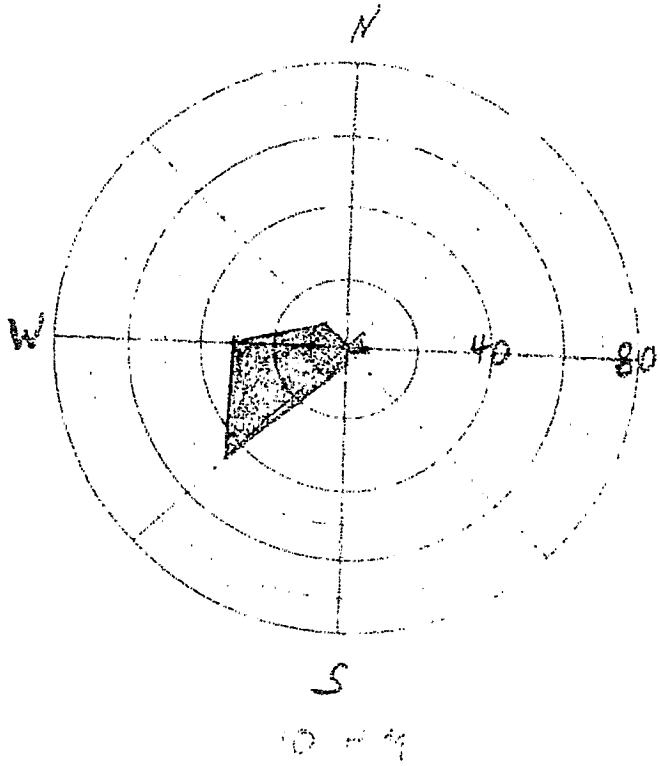

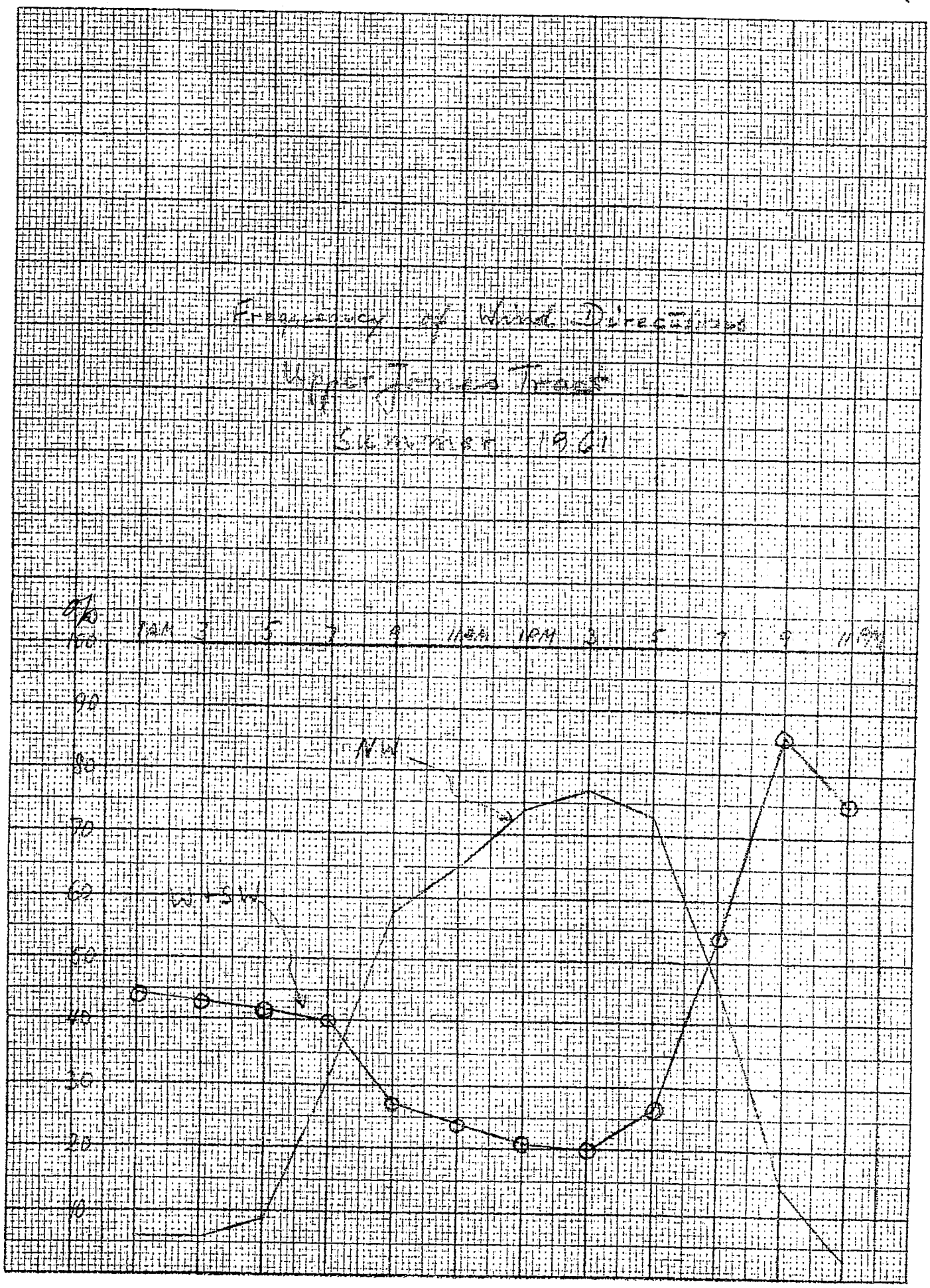


Tre A. Lietz Co., San Francisco
Made in U.S.A.



D-029801

Summary Diagram of Wind Directions in %
Upper Jones Tract
June and July 1961

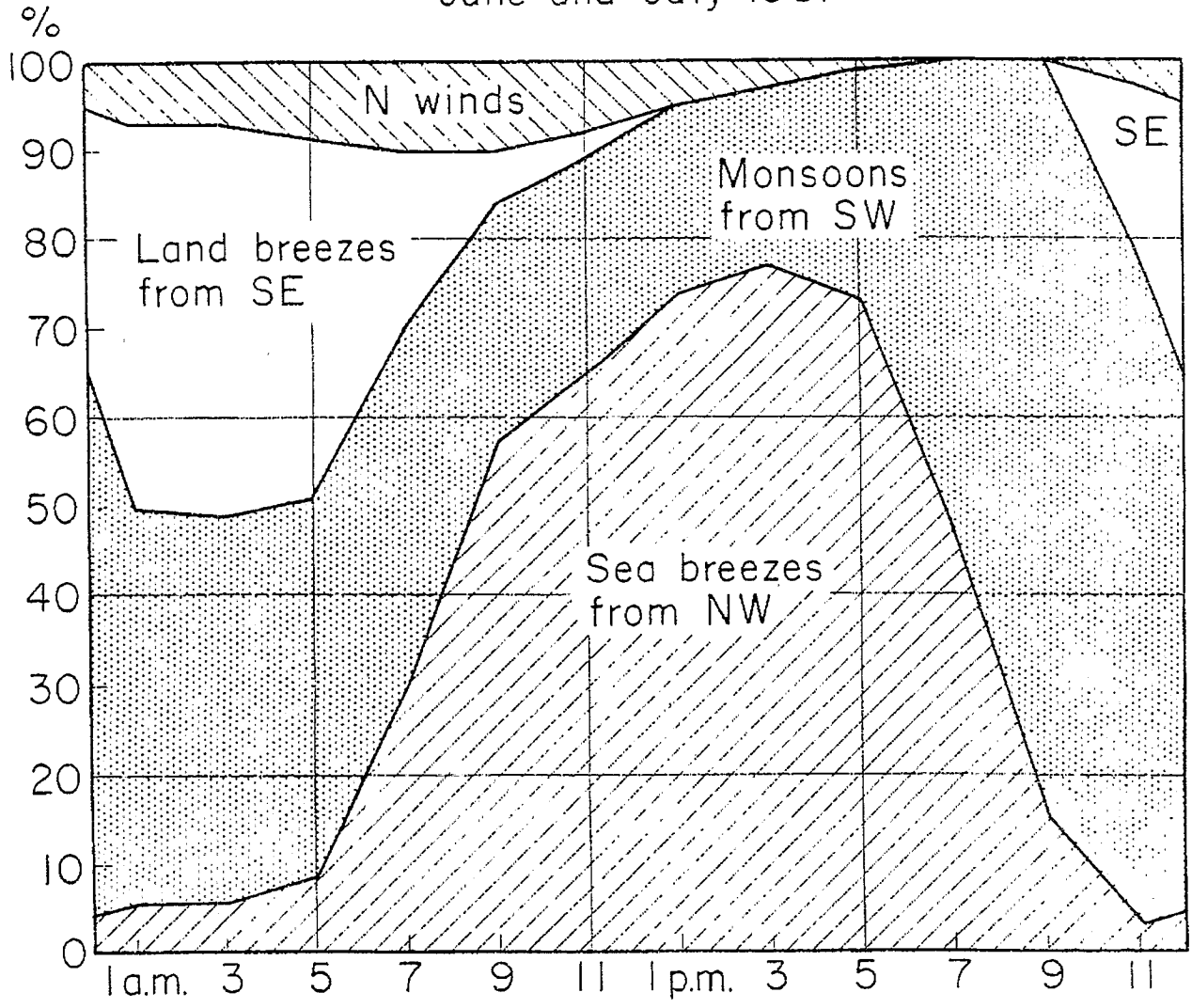




D-029802

Form B-50m-10,'61(C2526)

UNIVERSITY OF CALIFORNIA
DIVISION OF AGRICULTURAL SCIENCES
AGRICULTURAL EXPERIMENT STATION

PROJECT NO. 1026 PG. 220
REPORTED BY R.B. Schultz
Project Leader
Davis - Ag. Engineering
Campus and Department
DATE December 31, 1961

Wind survey in the San Joaquin Delta.

In the 1961 dust season, three California Spot Climate Stations were operated between May and September. They were installed at Terminous (the "key" station), on Bacon Island, and on Upper Jones Tract, the two latter ones near the south border of the peat soil area. Due to many instrument failures combined with rather poor cooperation of the caretakers in the field, there are many and considerable breaks in the monthly tabulations. However, the principle information sought in this season could still be obtained. In the Tables 1 to 3 for Terminous, it can be seen that the records for the months of main interest, namely May and June, are reasonably complete, except for 10 missing days in May (Table 1). According to Tables 1 and 3, which are made up in the same fashion as in previous years, the occurrence of winds with velocities over 10 mph was extremely high. The same is also the case for winds over 15 mph, as can be learned from Table 3. Numbers are set in parenthesis in this table in those months for which a full record was not available. Even with 10 days missing the month of May has record number of hours with velocities over 15 mph. This would indicate extreme erodibility conditions which might have been critical if the fields had not been protected to a great amount by inter-row plantings. Another "damping" factor, which could hardly be evaluated without field observations, could possibly have consisted of the low temperatures during that month. E.g. in Davis, the 80°F mark was passed only on 5 days, vs. the normal number of 17 days. Thus, the usual

p 224

D-029803

D-029803

tendency for a buoyant uplift from an overheated surface might have been less pronounced. As, on the other hand, blowing dust conditions were experienced in the past in strong winds of prolonged duration, a special tabulation was prepared for the months of May and June from 1956 to 1961. The following months usually are of little significance as was shown in the 1960 report.

Occurrence of wind velocities over 10 mph with persistence of at least 5 hours. Number of days.

| | 1956 | 1957 | 1958 | 1959 | 1960 | 1961 |
|---|---|---|---|---|---|---|
| May | 5 | 4 | 10 | 9 | 8 | 11+ |
| June | 1 | 1 | 7 | 5 | 5 | 5 |
| | | | Same but for 6 hours persistence. | | | |
| May | 2 | 3 | 4 | 6 | 5 | 8+ |
| June | 0 | 1 | 3 | 1 | 4 | 4 |

The "plus" signs were added to the May 1961 figures as a reminder that records were lacking on 10 days, and that, therefore, these figures might still have been higher.

The second objective of this year's survey was the clarification of the wind directions at the southern border of the peat land area, roughly between Stockton and Tracy. In past reports our tabulations of air movement during dust storms only contained the prevailing direction which was established from nearby stations as NW. However, some occasional reports from individual visits indicated that southwesterly directions

might have a considerable share in contributing to the Stockton dust problem. Orographic influences were suspected that would channel the sea breezes into a SW to NE direction. For an analysis of the wind situation, 80 days with direction recording were available from the station on Bacon Island, and 35 days from the station on Upper Jones Tract. The results show a considerable number of SW directions, indeed, but they do not appear to be a sea breeze phenomenon. In the two wind rose diagrams, it can clearly be seen that between 9 A. M. and 5 P. M. the time of the peak development of the sea breezes, the directions are almost entirely from the NW. There are a few SW winds as well as a few other directions in the wind roses in the daytime, but they were originated by an occasionally strong general isobaric pattern. These SW winds lasted all 24 hours and were just the same in Northern California. A surprise, however, is the almost complete change of the NW directions into SW directions in the late afternoon. This is shown in the frequency diagram for the Upper Jones Tract. It can be seen that the change begins after 5 P. M. The W and SW directions were combined because the actual direction recorded was in between and would be called WSW in the case of a 16-point wind rose.

The practically regular change to southwesterly directions in late afternoon is a surprise because a NW direction toward the stationary LOW center over Arizona is generally expected and streamline diagrams show a straight northwesterly wind pattern. In a recently published paper on wind patterns in the Sacramento Valley, a secondary LOW over Northern

Form B-50m-10,'61(C5720)

UNIVERSITY OF CALIFORNIA
DIVISION OF AGRICULTURAL SCIENCES
AGRICULTURAL EXPERIMENT STATION

PROJECT NO. 1686 PG. 223

REPORTED BY H.E. Schultz
Project Leader

Davis - Ag. Engineering
Campus and Department

DATE December 31, 1961

California was detected on 60% of all summer days during the late afternoons. It appears that this LOW's influence reaches as far south as the area under investigation, turning the winds there into a southwesterly direction. This explanation can be corroborated by using the attached Figure 8 of the Sacramento Valley paper which shows a maximum development of the southwesterly flow at Davis between 5 P. M. and 11 P. M. exactly coinciding with the SW directions on Upper Jones Tract. Figure 7 of the same paper shows an example of the diurnal HEAT-LOW in Northern California that usually lasts until after midnight. Its apparent influence in the San Joaquin Valley invites further and more detailed investigations.

p. 224a

D-029806

D-029806

Form B-50m-10,'61(C3720)

UNIVERSITY OF CALIFORNIA
DIVISION OF AGRICULTURAL SCIENCES
AGRICULTURAL EXPERIMENT STATION

PROJECT NO. 1686 PG.

REPORTED BY H.B.Schultz
Project Leader

Davis - Ag. Engineering
Campus and Department

DATE December 31, 1961

Terminous 1961 Wind Survey

Table 1. Number of days with at least one hourly velocity over 10 mph

| | May | June | July | Aug. | Sept. | Total |
|---|---|---|---|---|---|---|
| No. of days with records | 21 | 30 | 9 | 15 | 4 | 79 |
| No. of days vel. over 10 mph | 20 | 24 | 5 | 3 | 2 | 54 |
| Same with dir. from WSW-WNW | 20 | 24 | 5 | 3 | 1 | 53 |
| Same in % of all days over 10 mph | 100 | 100 | 100 | 100 | 50 | 98 |

Table 2. Prevailing directions for velocities over 10 mph (May to Sept.)

| Directions | S | SSW | SW | WSW | W | WNW | NW | NNW | N | NNE | NE | ENE | E | ESE | SE | SSE | Total |
|---|---|---|---|---|---|---|---|---|---|---|---|---|---|---|---|---|---|
| No. of days | 0 | 0 | 0 | 35 | 17 | 0 | 1 | 0 | 0 | 0 | 0 | 0 | 0 | 0 | 0 | 0 | 53 |
| Same in % | 0 | 0 | 0 | 65 | 33 | 0 | 2 | 0 | 0 | 0 | 0 | 0 | 0 | 0 | 1 | 0 | 100 |

Table 3. Frequency of hours of high velocities for the various months

| | May | June | July | Aug. | Sept. |
|---|---|---|---|---|---|
| No. of hours over 10 mph | ( 282 ) | 281 | ( 38 ) | ( 25 ) | ( 10 ) |
| No. of hours over 15 mph | ( 122 ) | 85 | ( 6 ) | ( 0 ) | ( 7 ) |
| Ave. duration of one daily period over 10 mph | 14.1 | 11.7 | 2.6 | 8.3 | 5.0 |

D-029807

D-029807

HOURLY WIND ON JUNE 23, 1954 & WEATHERMAPS

g.6. Wind velocity distribution for the various directions in % of all 8-9 A.M. and 4-5 P.M. hours during June, July, August 1954, 55, 56. Shaded columns for velocity upto 4 mph, unshaded above 4 mph.

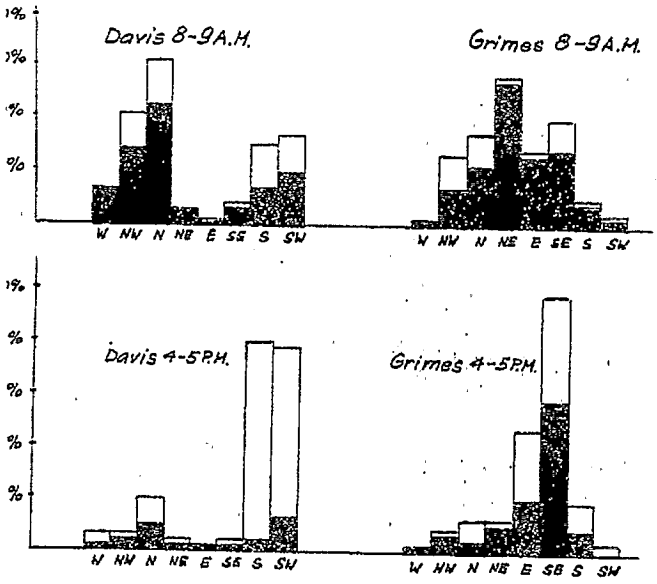


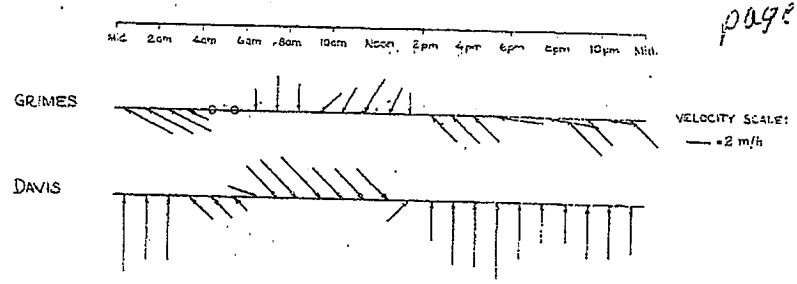


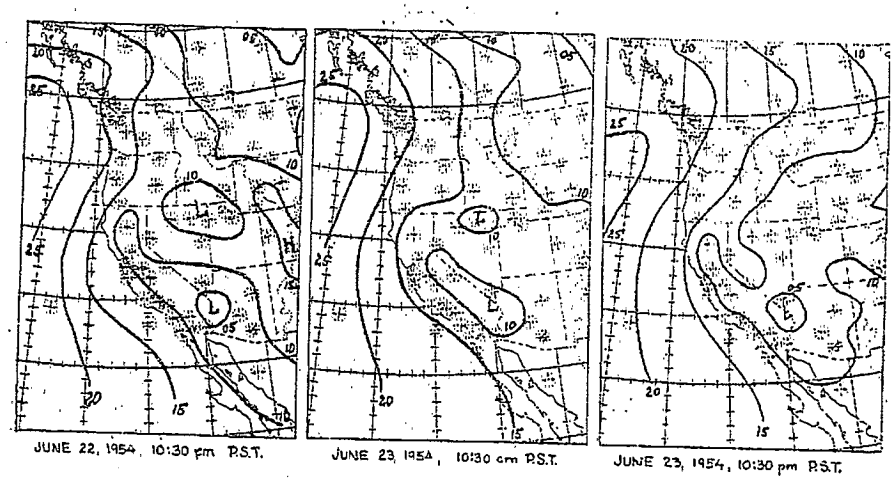

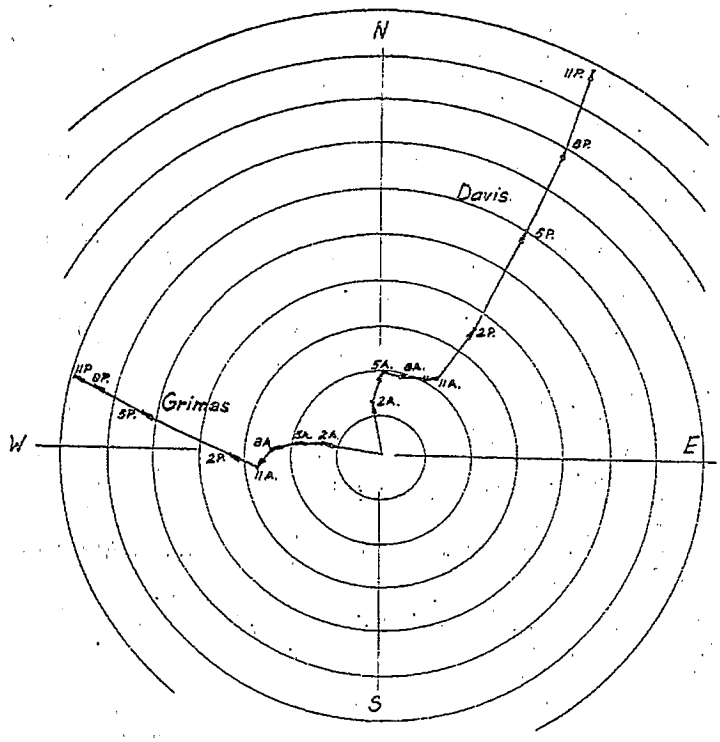
Fig. 8 Average daily air mass displacement determined by totaling of three-hourly vectorial averages. June, July, and August 1954-56