FIGURE 1. DSM1 Geometry Validation Procedure

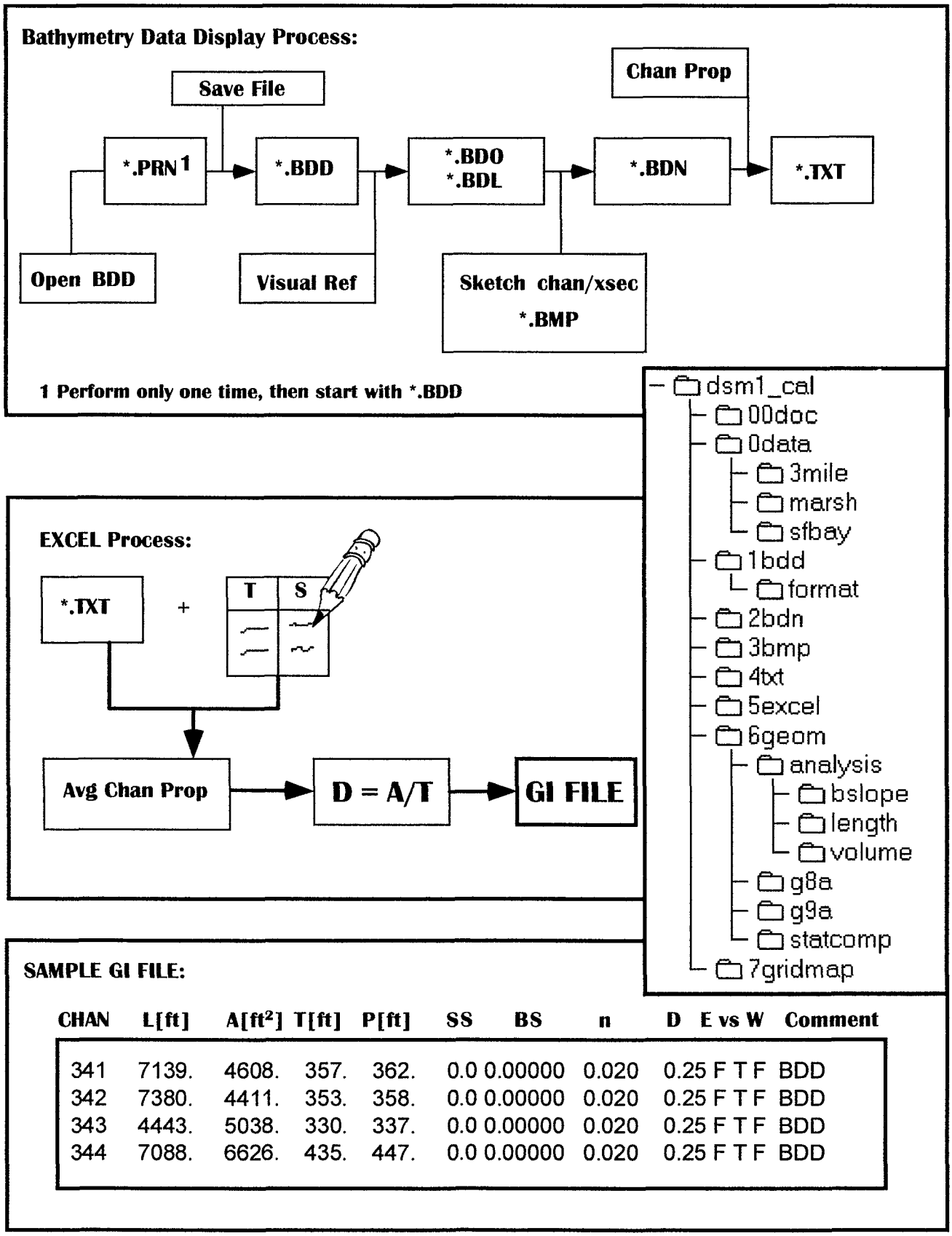

CHAN	L[ft]	A[ft²]	T[ft]	P[ft]	SS	BS	n	D	E vs W	Comment
341	7139.	4608.	357.	362.	0.0	0.00000	0.020	0.25	F T F	BDD
342	7380.	4411.	353.	358.	0.0	0.00000	0.020	0.25	F T F	BDD
343	4443.	5038.	330.	337.	0.0	0.00000	0.020	0.25	F T F	BDD
344	7088.	6626.	435.	447.	0.0	0.00000	0.020	0.25	F T F	BDD

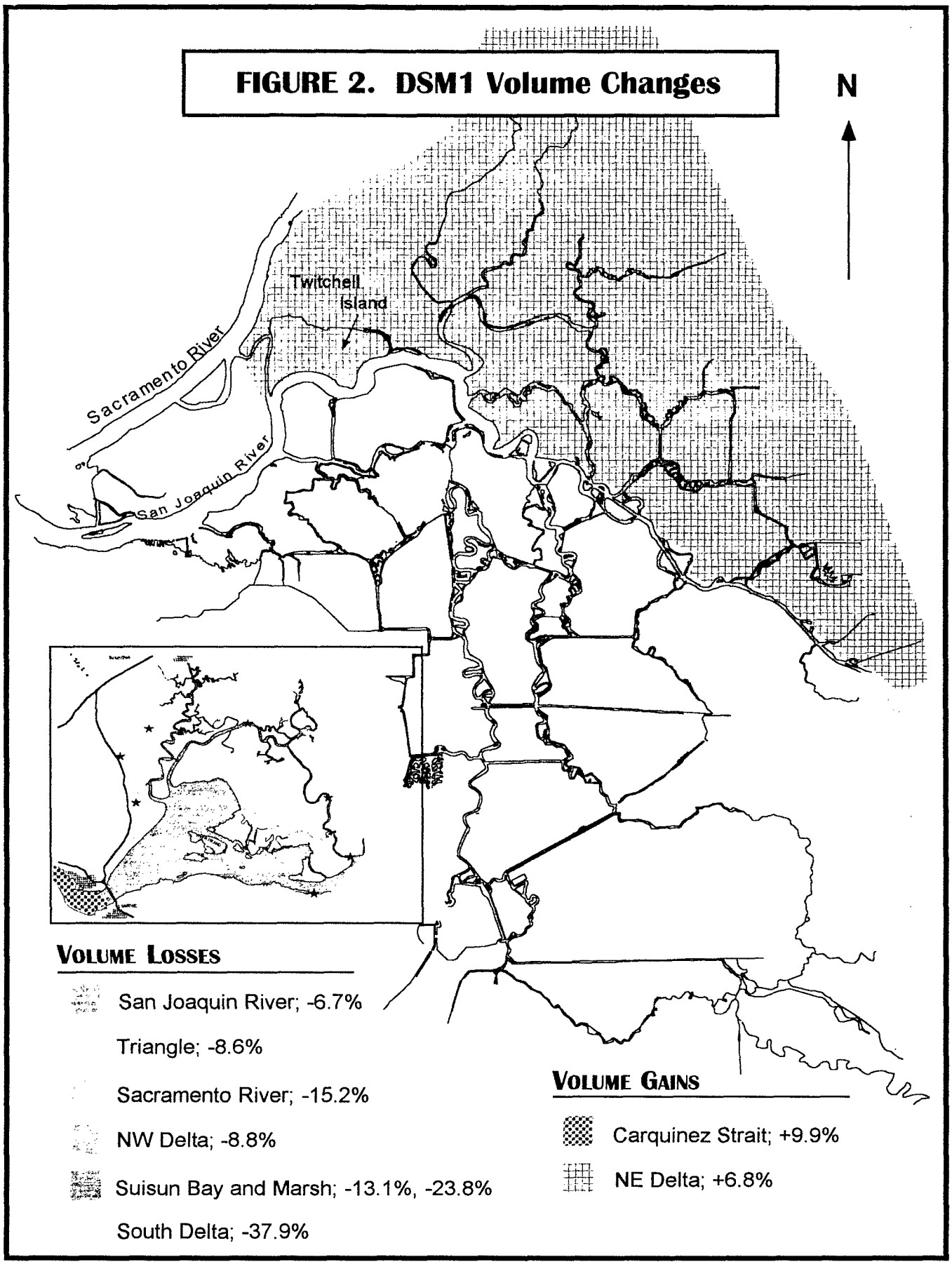
FIGURE 2. DSM1 Volume Changes
N
Twitchell Island
Sacramento River
San Joaquin River
VOLUME LOSSES
San Joaquin River; -6.7%
Triangle; -8.6%
Sacramento River; -15.2%
NW Delta; -8.8%
Suisun Bay and Marsh; -13.1%, -23.8%
South Delta; -37.9%
VOLUME GAINS
Carquinez Strait; +9.9%
NE Delta; +6.8%